Setting the Standard for Automation™

ISA Standards

Using Published Standards to Save Time, Resources and Money

Speaker:
Graham Nasby, P.Eng., PMP
Eramosa Engineering

Standards
Certification
Education & Training
Publishing
Conferences & Exhibits

ISA Hamilton Dinner Meeting
April 29, 2014 – Burlington, Ontario, Canada

About the Speaker

Graham Nasby, P.Eng., PMP

- **President of ISA Hamilton Section (2013/2014)**

- Senior I&C Engineer & Alarm Management Expert with Eramosa Engineering
- Director of ISA Water/Wastewater Industries Division
- Voting member of ISA18, Co-Chair of ISA18 Working Group 7
- Other Standards Committees: ISA101, ISA105, ISA99, ISA88, IEC/SCC--TC65

- Has published over 30 papers and articles on automation topics
- Recipient of 2013 ISA awards for Volunteer Leader, Division Leader & Division Excellence
- Received Control Engineering magazine's "Leaders Under 40" award in 2011
- 2011 ISA "Keith Otto" award for best article of year in InTech: "SCADA Standardization"
- Background in various industry sectors including municipal water/wastewater

- Contact: graham.nasby@eramosa.com

ERAMOSA ENGINEERING INC.

Presentation Outline

- What is a Standard?
- How Standards Are Developed
- Standards & Standards Body Accreditation
- Benefits of Standards
- ISA Standards
- ISA Standards Committees
- List of some major ISA Standards
  - ISA5 – P&IDs, Tagging, Drawings, Documentation
  - ISA18.2 – Alarm Management
  - ISA20 – Instrumentation & Valve Specification Forms
  - ISA95 – Enterprise Integration
  - ISA99 – Cyber Security
  - ISA100 – Wireless Systems
- Summary
- More Information

What is a Standard?

- A set of characteristics, quantities, or procedures that describes features of a product, process, service, interface, or material
- Standards provide numerous benefits in automation and production
- A “standards series” can often include Standards, Recommended Practices, and/or Technical Reports
- Format can be printed documents, PDFs, downloadable files, or templates

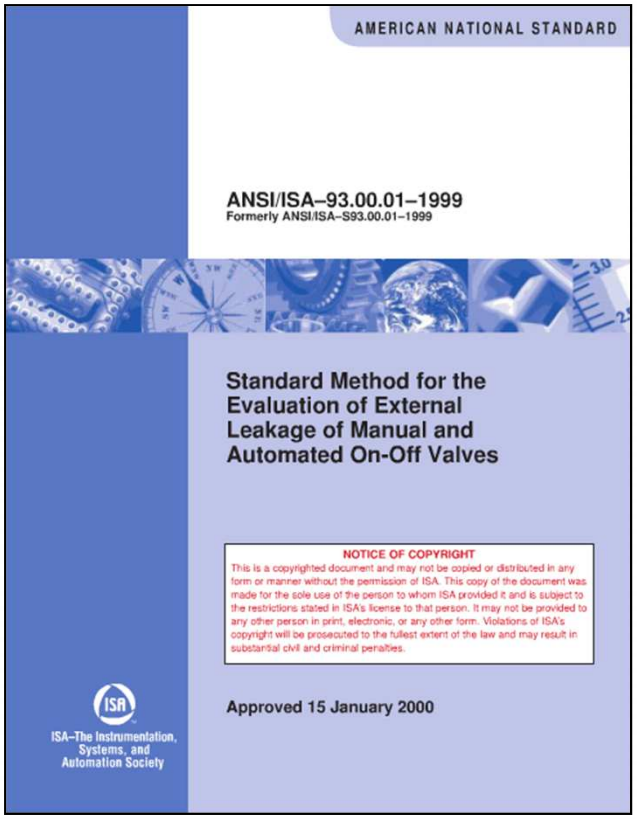
AMERICAN NATIONAL STANDARD

ANSI/ISA–93.00.01–1999
Formerly ANSI/ISA–S93.00.01–1999

Standard Method for the Evaluation of External Leakage of Manual and Automated On-Off Valves

NOTICE OF COPYRIGHT
This is a copyrighted document and may not be copied or distributed in any form or manner without the permission of ISA. This copy of the document was made for the sole use of the person to whom ISA provided it and is subject to the restrictions stated in ISA's license to that person. It may not be provided to any other person in print, electronic, or any other form. Violations of ISA's copyright will be prosecuted to the fullest extent of the law and may result in substantial civil and criminal penalties.

Approved 15 January 2000

ISA–The Instrumentation, Systems, and Automation Society

A Practical Standards Example

- The IEC 60320 standard defines the “C13” power plug/socket
- Standardized power inlet cord for computer equipment

Accommodates all these “weird” country-specific plugs

How Standards are Developed

- Standards are generally developed by standards committees
- Need to look at the terms of reference for the committee and what organization it is associated with
- Some “standards committees” are better than others

- Characteristics of a “good” standards committee / organization:
  - Openness
  - Lack of Dominance
  - Balance
  - Consensus
  - Right of Appeal

Standards Accreditation

- Accreditation of a standards producing organization by a recognized national or international standards body is a good sign

- In the USA:
  - American National Standards Institute (ANSI)
- In Canada:
  - Standards Council of Canada (SCC)

- Two major international standards bodies:
  - IEC = International Electrotechnical Commission
  - ISO = International Organization for Standardization

The ISA is accredited through ANSI and is associated with the IEC internationally

Key Benefits of Standards

- Direct return on investment
  - Lower installation and startup costs
  - Reduce need to maintain large inventories
  - Enable interchangeability of components
  - Improve design with less "custom" effort
  - Increase safety
  - Increase security

Key Benefits of Standards (cont.)

- Use of standards with automation systems
  - Improves communication
  - Provides practical application of expert knowledge
  - Harnesses years of experience and avoids the need to start each project from the ground up

Key Benefits of Standards (cont.)

- Standards help achieve operational excellence by
  - Improving performance
  - Lowering maintenance costs
  - Reducing downtime
  - Enhancing operability

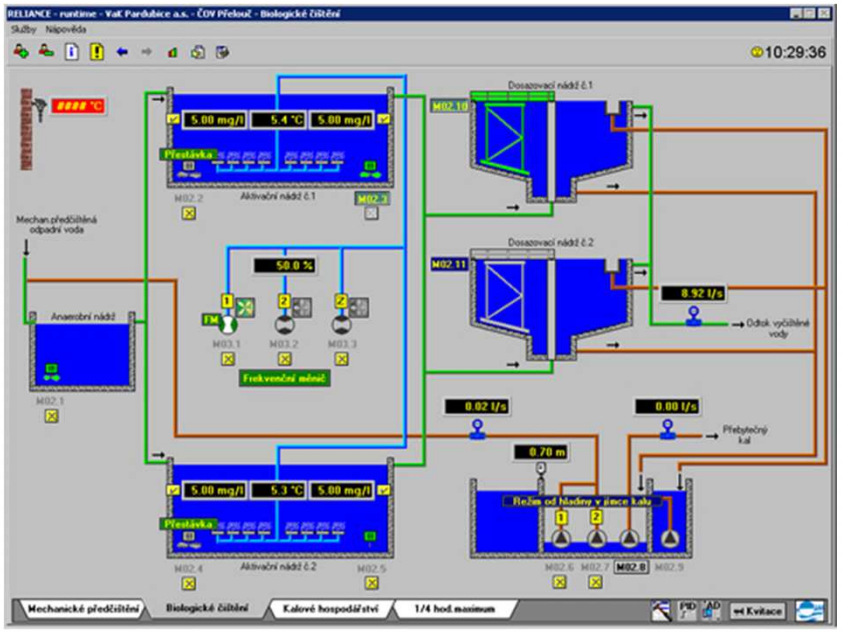

ISA Standards

Accredited by the American National Standards Institute (ANSI) to develop industry standards following approved procedures to ensure openness and fairness in considering the views and needs of end-users, suppliers, regulators, and others involved in each topic area.

- 162 published standards, recommended practices and technical reports
- 133 committees and subgroups
- More than 3500 participating individuals
  ….from over 40 countries,
  ….and representing more than 2000 companies and organizations.
- In person committee meetings 1-2 times per year as needed
- Extensive use of teleconferences and web meetings

ISA Standards Committees

- ISA Standards are developed by volunteer standards committees

- For individuals involved in standards development:

  - Expand your knowledge base
  - Identify resources for your work
  - Network with other professionals

  - Enhance your leadership skills
  - Ensure that your ideas and viewpoints are considered in the development of standards that could impact your work and/or your company's operations
  - Have fun

ISA Has Published Standards in Key Areas for the W & WW sector Including:

- Symbols and Diagrams (ISA5)
  - P&IDs, Tagging, Loop Diagrams, Functional Specifications, etc.

- Electrical Equipment for Hazardous Locations (ISA12)

- Alarm Systems (ISA18)
- Instrumentation Specification Forms (ISA20)
- Electrical Signal Compatibility (ISA50)

- Control Valves (ISA75)
- Functional Safety (ISA84)
- Batch Control (ISA88, formerly “S88”)

ISA Has Published Standards in Key Areas Including:

- Enterprise Control System Integration (ISA95)
- Valve Actuators (ISA96)
- Personnel Certification, CCST & CAP certifications (ISA98)

- Industrial Automation & Control System Security (ISA99)
- Wireless Systems for Automation (ISA100)

- Procedural Automation (ISA106)

To be published soon:

- Human Machine Interfaces (ISA101)
- Commissioning, Loop Checks, FAT and SAT Testing (ISA105)

Examples

Examples of key ISA Standards
used in most industries

ISA5.1, ISA5.4, ISA5.6 Drawings & Documentation

ISA18.2 Alarm Management

ISA20 Instrument Specification Forms

ISA95 Enterprise Integration

ISA99 Cybersecurity

ISA100 Wireless

ISA5: Symbols and Diagrams

- ISA 5.1 defines P&ID symbols,
  - P&ID = Piping & Instrumentation Diagram
- ISA 5.1 defines basis of ISA-style tagging
  - LIT101 = level indicating transmitter #101
  - PAHH103 = pressure alarm high high on pressure loop #103
  - ZSC205 = “fully closed” position switch for valve #205
  - etc.

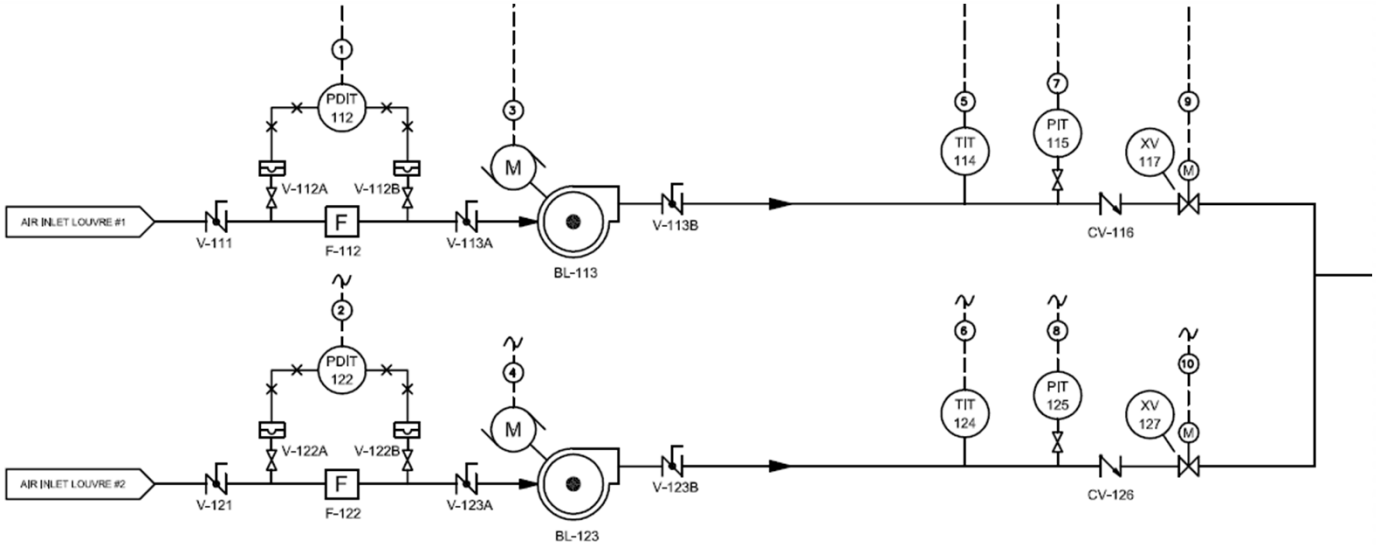

ISA5: Symbols and Diagrams (cont'd)

ANSI/ISA-5.1-2009,
Instrumentation Symbols and Identification

- ISA's most widely used American National Standard
- Establishes a uniform means of depicting and identifying instruments or devices and their inherent functions
- Intended for P&IDs, PFDs, UFDs, EFDs, MFDs, technical papers, specifications, and many other types of engineering documents

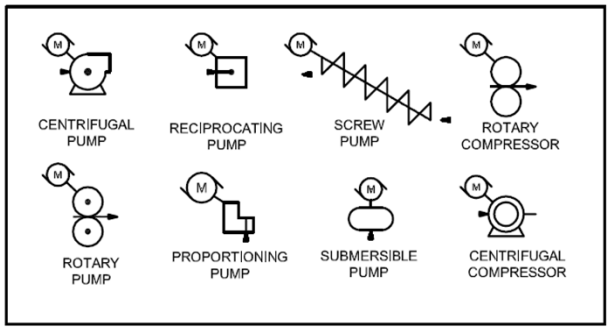

Figure 5 - Pumps are shown using simple line drawings

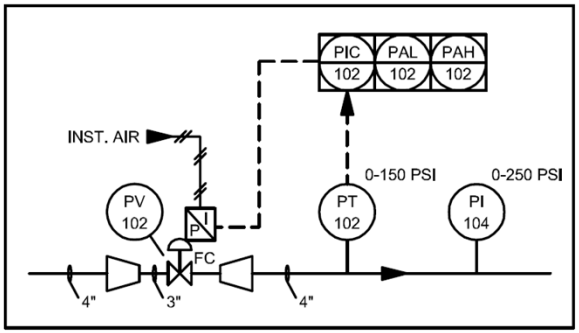

Figure 11 - Pressure control loop with high and low alarms

ISA5: Symbols and Diagrams (cont'd)

- ISA 5.4 defines loop diagrams for instrumentation
- ISA 5.6 provides templates for functional specifications
  - a type of very concisely written process control narrative

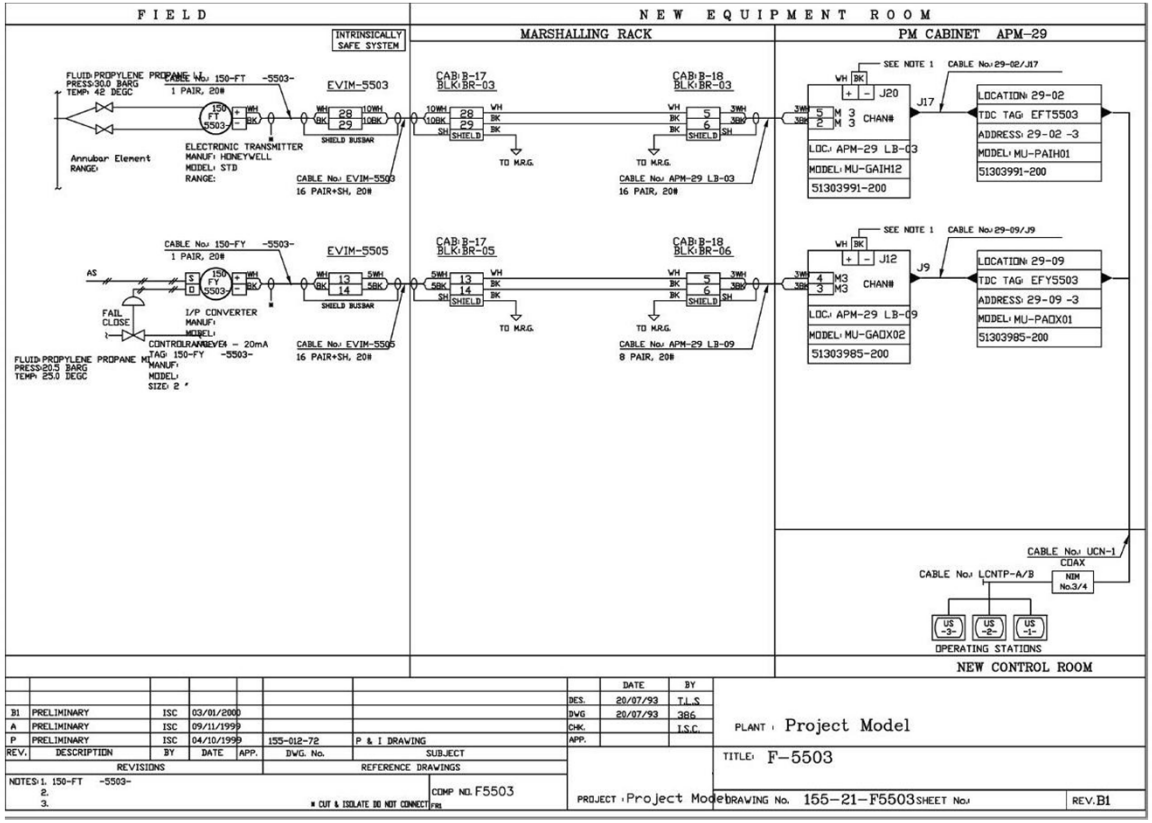

Example: ISA Loop Drawing

ISA 18.2: Alarm Management

ANSI/ISA-18.2-2009,

Management of Alarm Systems for the Process Industries

Alarm: *An audible and/or visible means of indicating to the operator an equipment malfunction, process deviation or abnormal condition requiring a response.*

Methodology for identifying, rationalizing and designing alarms to be a powerful tool for operations, and eliminating non-useful alarms

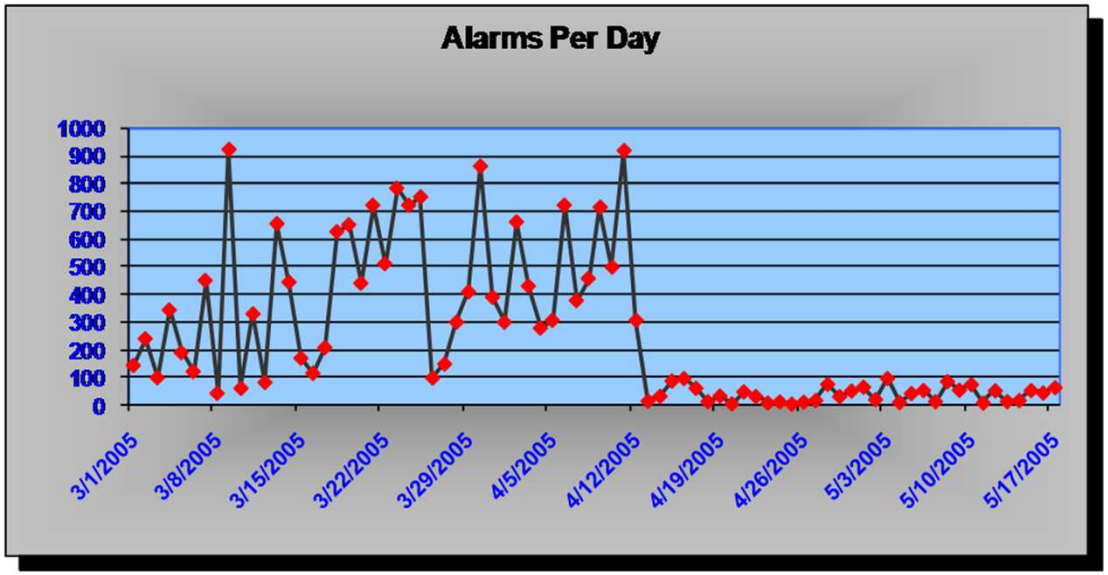

ISA 18.2: Alarm Management (cont'd)

ANSI/ISA-18.2-2009,
Management of Alarm Systems for the Process Industries

- Addresses the development, design, installation, and management of alarm systems in the process industries
- Defines the terminology and models to develop an alarm system – and the work processes to effectively maintain it throughout its lifecycle
- Six technical reports are now in development by ISA18 to explain specific applications in greater detail
- Currently in international development to become IEC 62682

ISA20: Instrument Specification Forms

- ISA-TR20 templates collection
- Templates for standardized specification forms to make specifying instrumentation easier
  - Standardized layout & content
  - MS Word Templates
  - MS Excel Templates
  - Database driven templates
- Standardized forms ensure consistency and help reduce mistakes

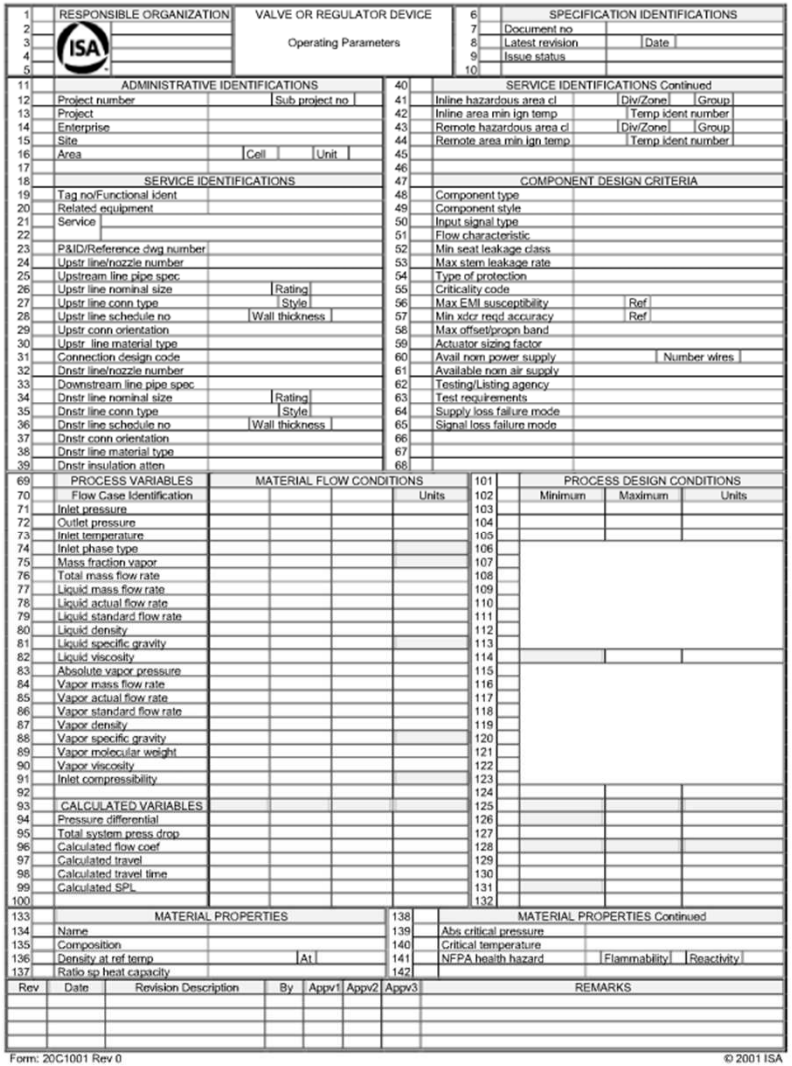

1	RESPONSIBLE ORGANIZATION		VALVE OR REGULATOR DEVICE		6	SPECIFICATION IDENTIFICATIONS			
2					7	Document no			
3			Operating Parameters		8	Latest revision	Date		
4					9	Issue status			
5					10				
11	ADMINISTRATIVE IDENTIFICATIONS				40	SERVICE IDENTIFICATIONS Continued			
12	Project number	Sub project no			41	Inline hazardous area cl	Div/Zone	Group	
13	Project				42	Inline area min ign temp	Temp ident number		
14	Enterprise				43	Remote hazardous area cl	Div/Zone	Group	
15	Site				44	Remote area min ign temp	Temp ident number		
16	Area	Cell	Unit		45				
17					46				
18	SERVICE IDENTIFICATIONS				47	COMPONENT DESIGN CRITERIA			
19	Tag no/Functional ident				48	Component type			
20	Related equipment				49	Component style			
21	Service				50	Input signal type			
22					51	Flow characteristic			
23	P&ID/Reference dwg number				52	Min seat leakage class			
24	Upstr line/nozzle number				53	Max stem leakage rate			
25	Upstream line pipe spec				54	Type of protection			
26	Upstr line nominal size	Rating			55	Criticality code			
27	Upstr line conn type	Style			56	Max EMI susceptibility	Ref		
28	Upstr line schedule no	Wall thickness			57	Min xdcr reqd accuracy	Ref		
29	Upstr conn orientation				58	Max offset/propn band			
30	Upstr line material type				59	Actuator sizing factor			
31	Connection design code				60	Avail nom power supply	Number wires		
32	Dnstr line/nozzle number				61	Available nom air supply			
33	Downstream line pipe spec				62	Testing/Listing agency			
34	Dnstr line nominal size	Rating			63	Test requirements			
35	Dnstr line conn type	Style			64	Supply loss failure mode			
36	Dnstr line schedule no	Wall thickness			65	Signal loss failure mode			
37	Dnstr conn orientation				66				
38	Dnstr line material type				67				
39	Dnstr insulation atten				68				

69	PROCESS VARIABLES	MATERIAL FLOW CONDITIONS				101	PROCESS DESIGN CONDITIONS		
70	Flow Case Identification				Units	102	Minimum	Maximum	Units
71	Inlet pressure					103			
72	Outlet pressure					104			
73	Inlet temperature					105			
74	Inlet phase type					106			
75	Mass fraction vapor					107			
76	Total mass flow rate					108			
77	Liquid mass flow rate					109			
78	Liquid actual flow rate					110			
79	Liquid standard flow rate					111			
80	Liquid density					112			
81	Liquid specific gravity					113			
82	Liquid viscosity					114			
83	Absolute vapor pressure					115			
84	Vapor mass flow rate					116			
85	Vapor actual flow rate					117			
86	Vapor standard flow rate					118			
87	Vapor density					119			
88	Vapor specific gravity					120			
89	Vapor molecular weight					121			
90	Vapor viscosity					122			
91	Inlet compressibility					123			
92						124			
93	CALCULATED VARIABLES					125			
94	Pressure differential					126			
95	Total system press drop					127			
96	Calculated flow coef					128			
97	Calculated travel					129			
98	Calculated travel time					130			
99	Calculated SPL					131			
100						132			

133	MATERIAL PROPERTIES			138	MATERIAL PROPERTIES Continued		
134	Name			139	Abs critical pressure		
135	Composition			140	Critical temperature		
136	Density at ref temp	At		141	NFPA health hazard	Flammability	Reactivity
137	Ratio sp heat capacity			142			

Rev	Date	Revision Description	By	Appv1	Appv2	Appv3	REMARKS

Form: 20C1001 Rev 0 © 2001 ISA

ISA95: Enterprise Integration

- ANSI/ISA-95.xx.xx family of standards and technical reports

- Defines a framework for doing enterprise integration of automation, SCADA and control systems
  - Models and Terminology
  - Object Model Attributes
  - Models of Manufacturing Operations Management
  - Business-to-Manufacturing Transactions

- Adopted as IEC 62264-X family of standards

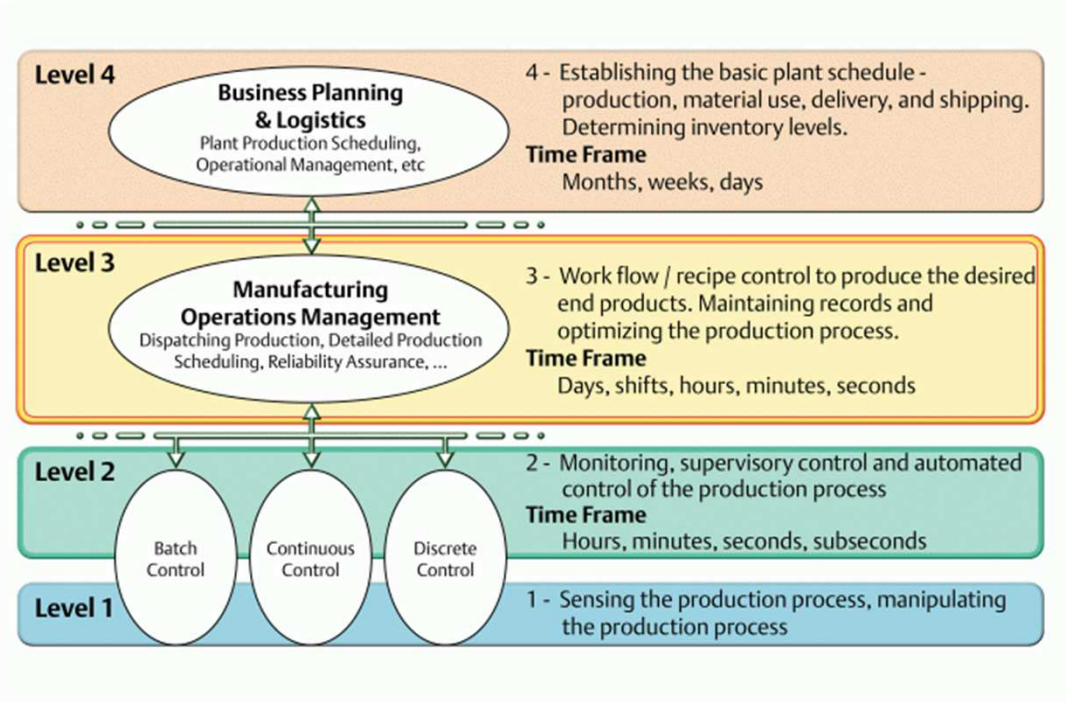

ISA99: Cyber Security

ANSI/ISA-99-xx-xx family of standards and technical reports
Security for Industrial Automation and Control Systems

- Defining procedures for implementing electronically secure SCADA and automatic control systems and security practices, and assessing electronic security performance.
- Bringing together control system / industrial cyber security experts from across the globe.
- ISA99 standards are being incorporated into government programs on critical infrastructure protection and smart grid development.
- ISA99 has been internationally adopted as IEC 62443 family of standards

ISA100: Wireless Systems for Automation

- The ISA100 family of standards is under active development
- ANSI/ISA-100.11a.2011 for wireless instrumentation now has IEC approval

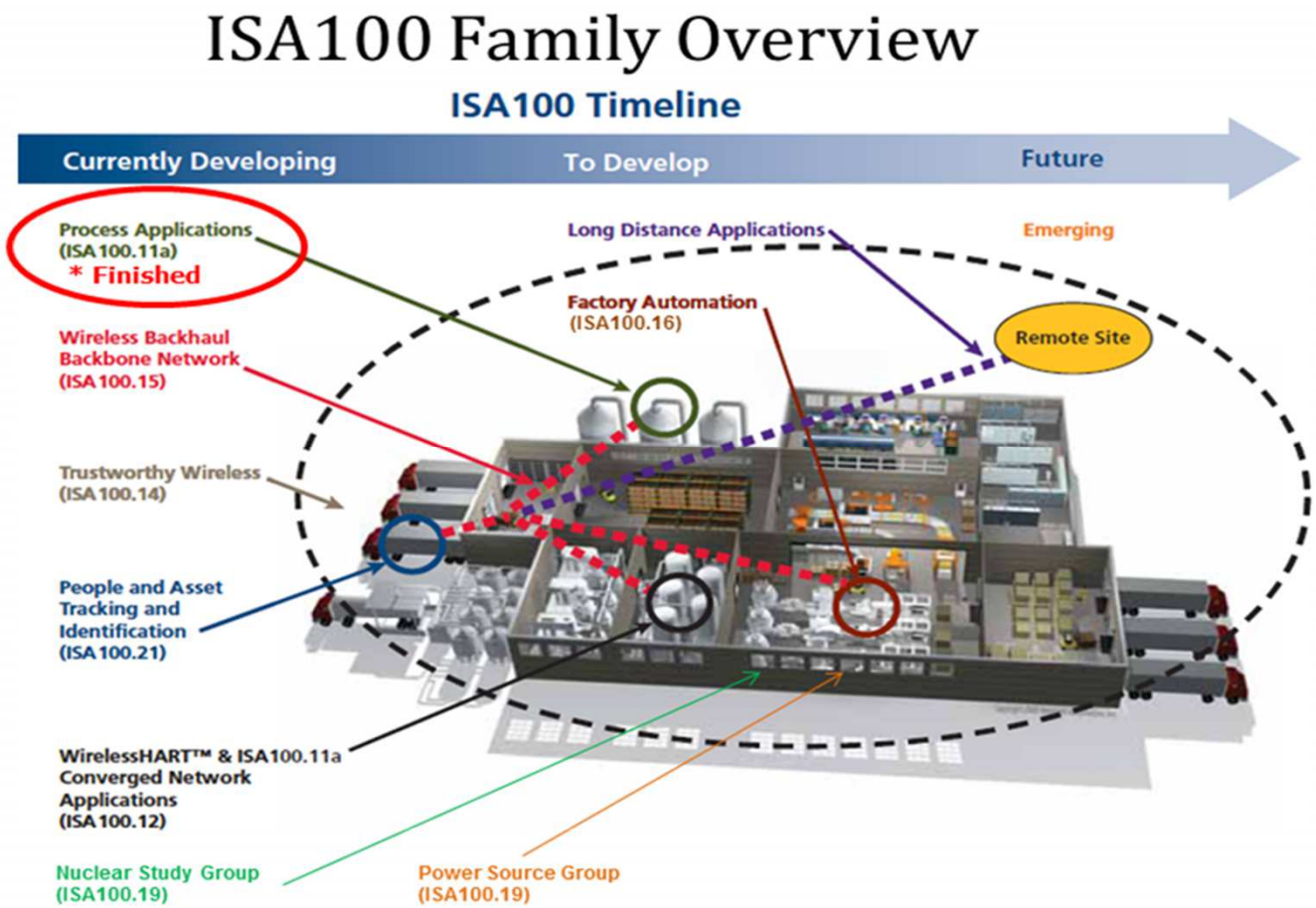

Other Key ISA Standards

ISA101 – Human Machine Interfaces

- Collection of standards and technical reports: HMI design best practices
- The ISA101 standards committee is currently working on its third draft
- To be published soon

ISA105 – Commissioning, Loop checks, SAT and FAT tests

- Standards published and under development in areas including:
  - Commissioning
  - Instrumentation & Electrical Loop Checks
  - Factory Acceptance Tests
  - Integration Testing
  - Site Acceptance Tests
  - Calibration Guidelines

ISA Standards: Global Impact

In fact, several original ISA Standards are the basis of major IEC (International Electrotechnical Commission) standards:

- IEC 62682: now in development based on, ANSI/ISA-18.2-2009 *Management of Alarm Systems for the Process Industries*

- IEC 62734: recently released based on ANSI/ISA-100.11a-2011, *Wireless Systems for Industrial Automation: Process Control and Related Applications*

- IEC 61511 series: Process Safety (ISA84)
- IEC 61512 series: Batch Control (ISA88)
- IEC 62264 series: Enterprise Control System Integration (ISA95)
- IEC 62443 series: Control Systems Security (ISA99)

Summary

- Using Standards has many benefits, including:
  - Lower installation, commissioning and start-up costs
  - Improved design with less “custom” effort
  - Lower training costs, improved communication, more consistent operation
  - Leverages the years of experience that are captured in standards
  - Improved performance, less downtime, and enhanced operability

- ISA has an extensive library of Standards available
  - 162 standards, recommended practices, and technical reports
  - ISA Standards are consensus based and non-commercial in nature
  - Broad applicability to SCADA, automation and instrumentation

- ISA Standards are available at www.isa.org
  - For purchase as printed & PDF copies
  - ISA members can view most ISA Standards for free online

For more information:

- How to get ISA Standards
  - For purchase (print & PDF) at www.isa.org, click on Standards
  - ISA Members can view most ISA standards for free at www.isa.org

- More information of ISA Standards
  - **www.isa.org/standards**

- Other industry standards:
  - **www.nssn.org** (key word search)

- Contact me: Graham Nasby
  - **graham.nasby@eramosa.com**